Bathtub Installation Instructions

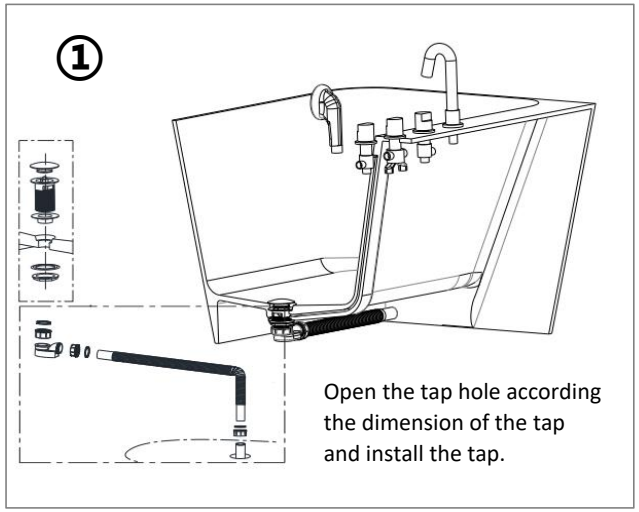

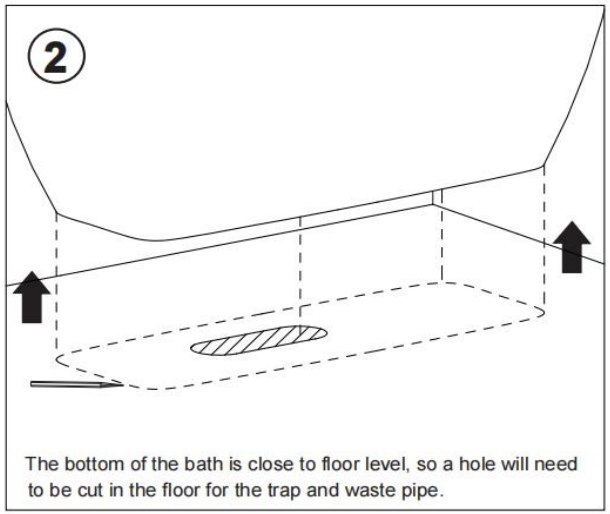

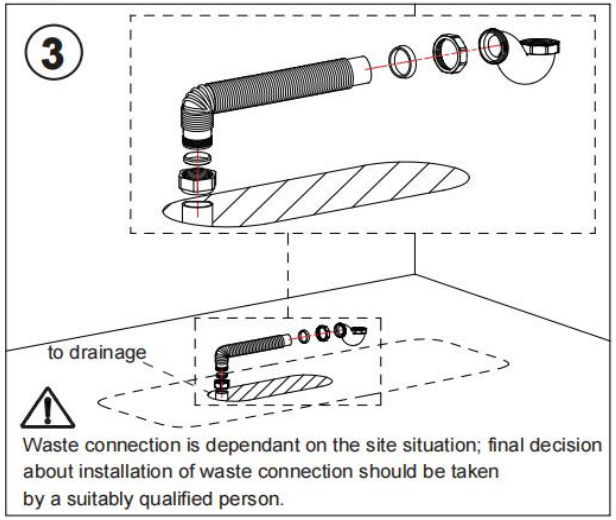

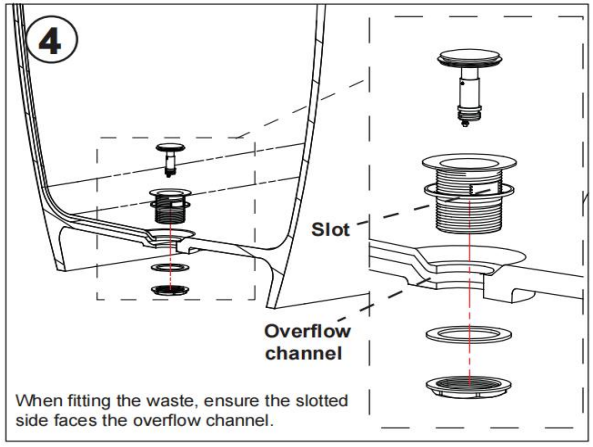

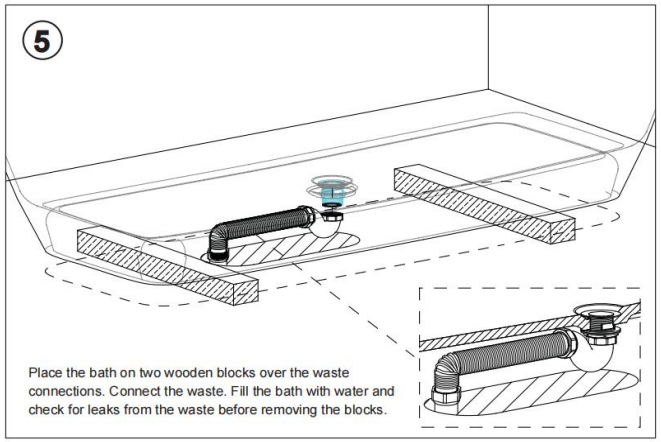

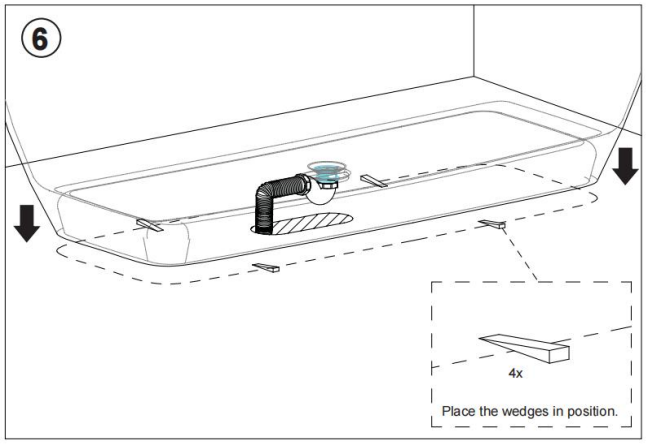

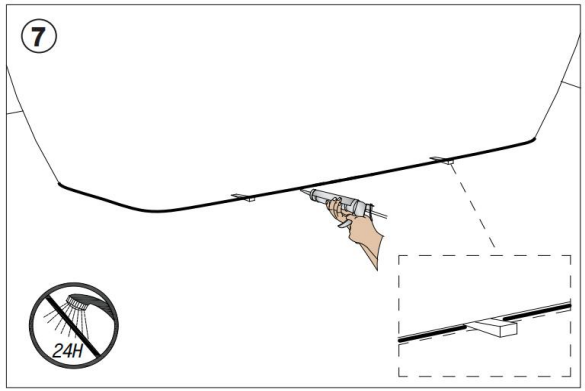
7
24H

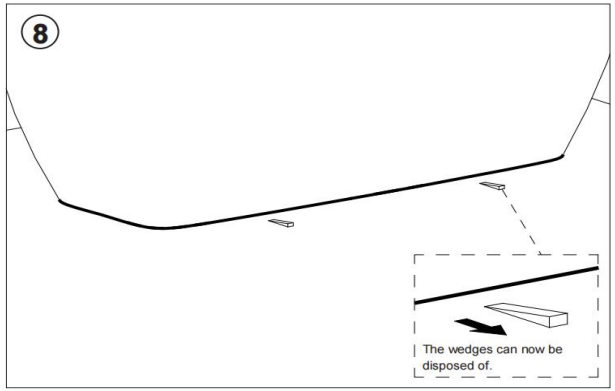
8
The wedges can now be disposed of.

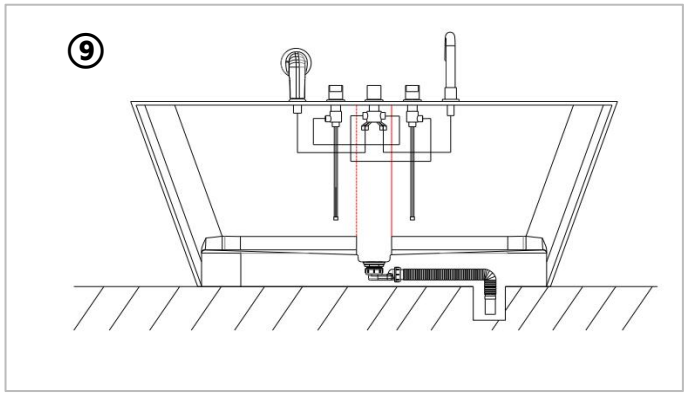
9

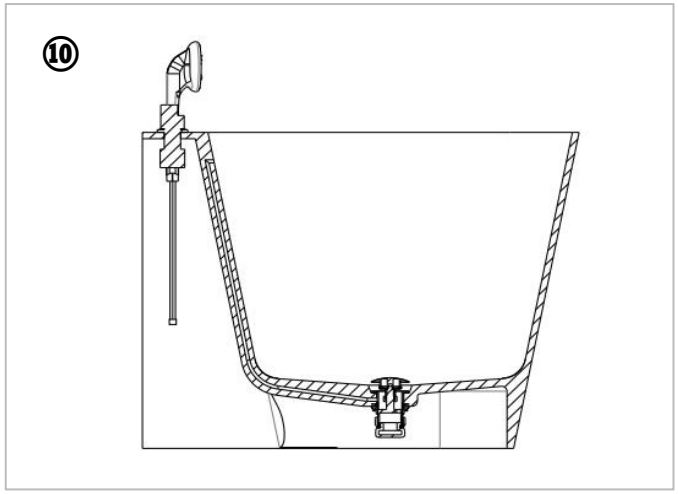
10

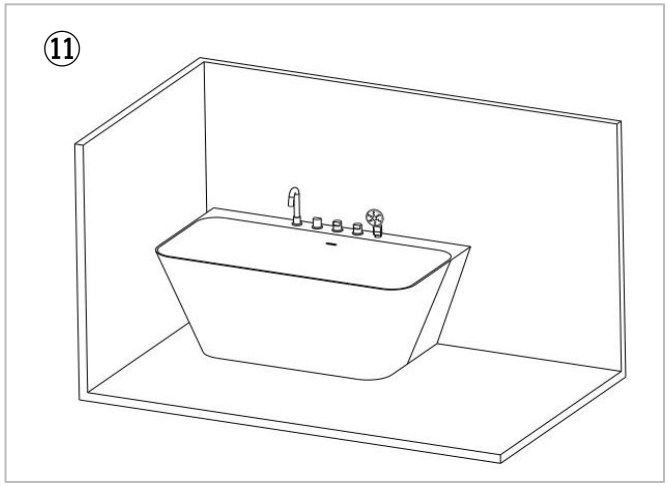
11