Penelope Fold Up Padded Seat SMPPS-

FEATURES

- Foldable Seat
- Seat material made from automotive-grade polyurethane foam
- Seat material is anti-microbial
- 304 Stainless steel mounting bracket for durability
- Holds up to 440 lbs. capacity

WARRANTY

- Lifetime Limited Warranty for residential use
- 5 Year Limited Warranty for commercial use

COLOR & FINISHES

- 2 seat colors available: White (01) & Black (09)
- 4 bracket finishes available (See below)

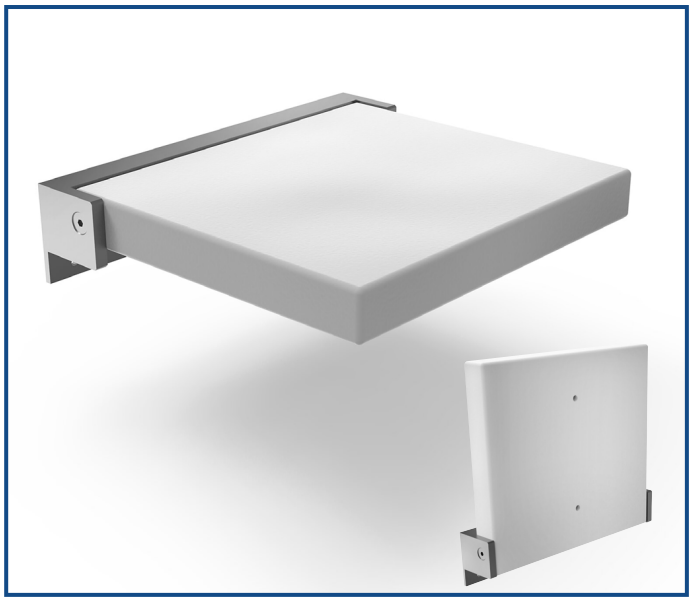

To Be Specified:

	Model No.	Seat Size W x D x H	Bracket Size W x H	Ship Wt. (lbs)
❒	*SMPPS1414UP-	14” x 13¾” x 1¾”	15“ x 3 9/16”	14
❒	SMPPS1420UP-	20” x 15¾” x 1¾”	21“ x 3 9/16”	18
❒	**SMPPS1526UP-	26” x 15” x 1¾”	26“ x 3 9/16”	26
❒	**SMPPS1534UP-	34” x 15” x 1¾”	34“ x 3 9/16”	31

TO ORDER add finish color after color code (ex. SMPPS1414IP-**01PC**)

To Be Specified: Finish

	BRACKET FINISHES	
❒	**PC**	Polished Chrome
❒	**BS**	Brushed Stainless
❒	**MB**	Matte Black
❒	**CB**	Champagne Bronze

*SMPPS1414UP- only available in Polished Chrome and Brushed Stainless

**26” & 34” seats meet ADA requirements

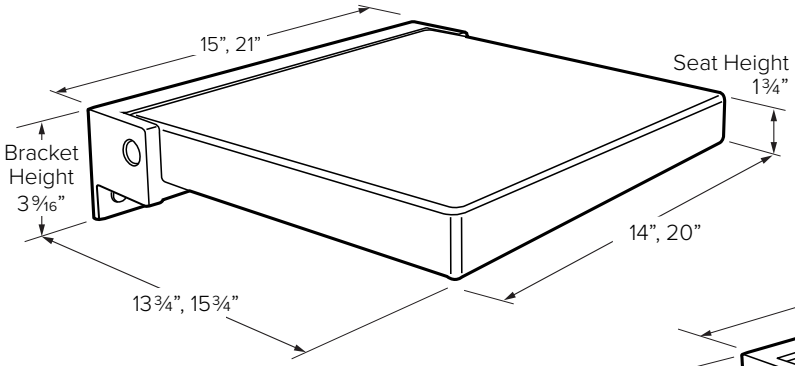

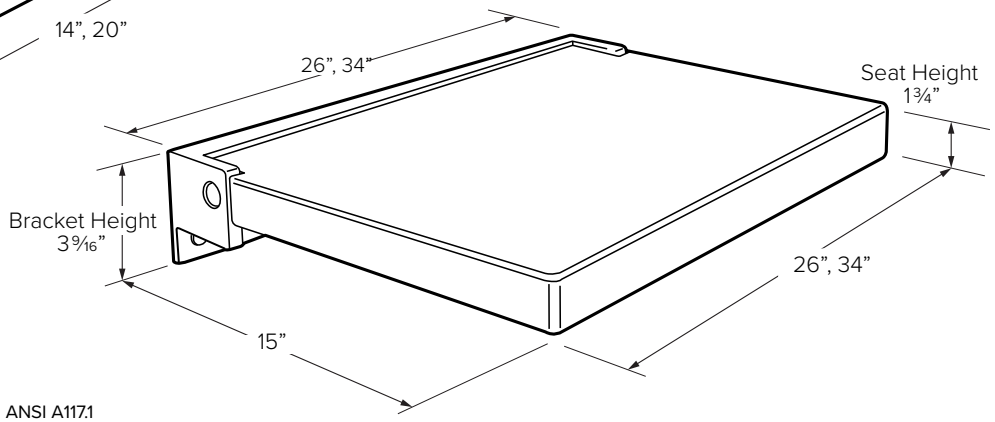

Meets the Americans with Disabilities Act guidelines and ANSI A117.1 requirements for accessible and usable building facilities-check local codes when installed per accessibility guidelines of the act.