1-Function 12-3/4" Showerhead
Remington SMDSHR1FR-

FEATURES

- Round style showerhead
- 12-3/4" diameter
- Single rain function with air injection
- Air injection technology: shower innovation that mixes air with water to create a more refreshing and comfortable shower experience. Air enters through the top of the showerhead and breaks into tiny bubbles, producing a soft, even spray that feels fuller and more soothing on the skin.
- Brass body with 304 stainless steel showerhead and silicone nozzles
- Comes with concealed installation box
- Wall mount design eliminates need for shower arm
- Max Flow Rate: 2.5 gpm
- Lifetime Limited Residential / 1-Year Limited Commercial Warranty

To Be Specified:

	Model No.	Description	Length	Width	Thickness
❒	SMDSHR1FR-	1-Function 12-3/4" Showerhead	12¾”	12¾”	1”

To Be Specified: Finish

❒	**PC**	Polished Chrome
❒	**BN**	Brushed Nickel
❒	**CB**	Champagne Bronze
❒	**MB**	Matte Black

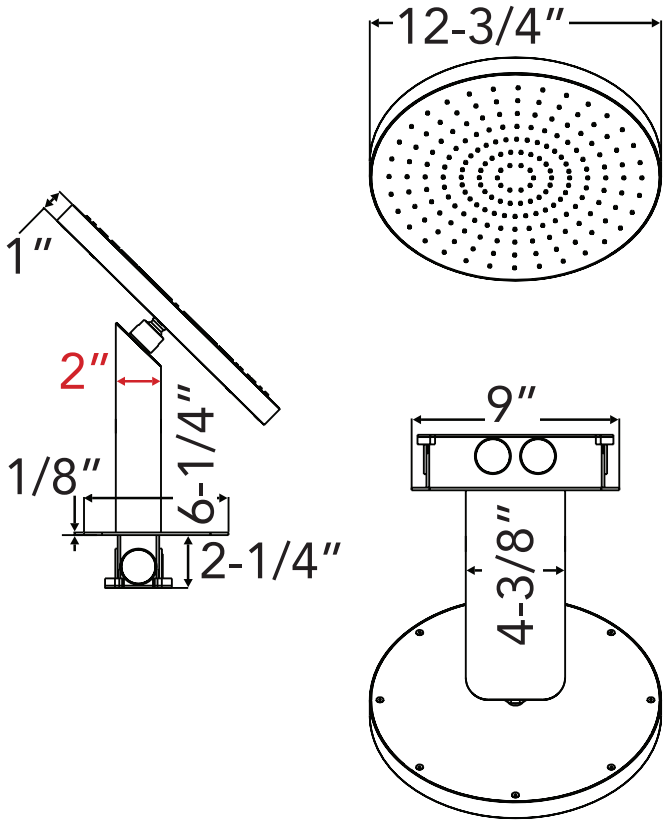

Compliance Certifications:
IAPMO

SHOWERING COMPONENTS