Thermostatic Push Button Round Trim w/1-Function Valve ArgoTherm SMVAT1R-

FEATURES

- ArgoTherm round-style trim plate and handle
- French VERNET thermostatic cartridge
- 6-1/4” diameter
- One-function with push button, which adjusts water flow.
- Solid brass construction valve
- Stainless steel trim plate and handle
- Use with Forever box (sold separately)
- Lifetime Limited Residential / 1-Year Limited Commercial Warranty

To Be Specified:

	Model No.	Description	Width	Height	Depth
❒	SMVAT1R-	Thermostatic Push Button Round Trim w/1-Function Valve	6¼”	6¼”	2⅛”

To Be Specified: Finish

❒	**PC**	Polished Chrome
❒	**BN**	Brushed Nickel
❒	**CB**	Champagne Bronze
❒	**MB**	Matte Black
❒	**31PC**	Polished Chrome w/ White Glass

Polished Chrome

Brushed Nickel

Champagne Bronze

Matte Black

Polished Chrome w/White Glass

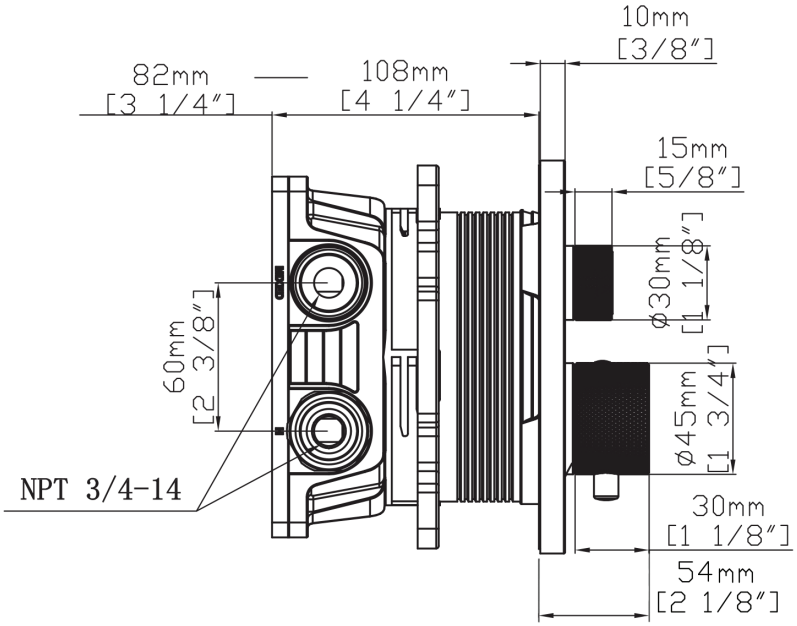

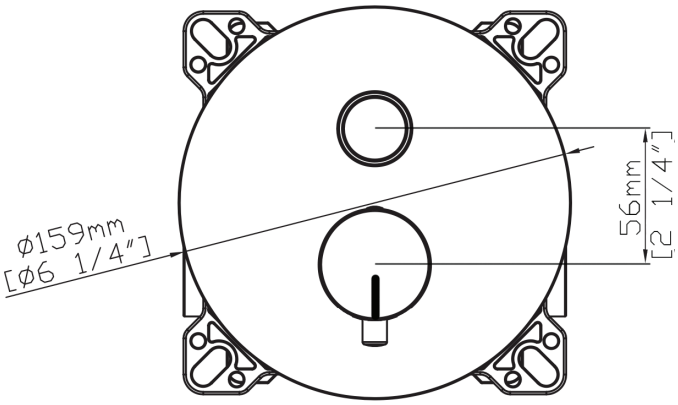

Compliance Certifications-
Meet or Exceed the Following Specifications

Meets the Americans with Disabilities Act guidelines and ANSI A1171 requirements for accessible and usable building facilities-check local codes when installed per accessibility guidelines of the act.

SHOWERING COMPONENTS