Pressure Balance Push Button Round Trim w/2-Function Valve | Novelle SMVNP2R-

FEATURES

- Round-style trim plate and handle
- Two-function with push buttons
- Taiwan Hani-Yo pressure balance cartridge + Neoperl push button diverter cartridge
- 7-1/8" diameter
- 1/2" NPT male thread
- Stainless steel trim plate
- Solid brass material without installation box
- ADA compliant lever handle
- Lifetime Limited Residential / 1-Year Limited Commercial Warranty

Specified Model

	Model No.	Description	Width	Height
❒	SMVNP2R-	Pressure Balance Push Button Round Trim w/2-Function Valve	7-1/8"	7-1/8"

To Be Specified: Finish

❒	**PC**	Polished Chrome
❒	**BN**	Brushed Nickel
❒	**CB**	Champagne Bronze
❒	**MB**	Matte Black

Polished Chrome

Brushed Nickel

Champagne Bronze

Matte Black

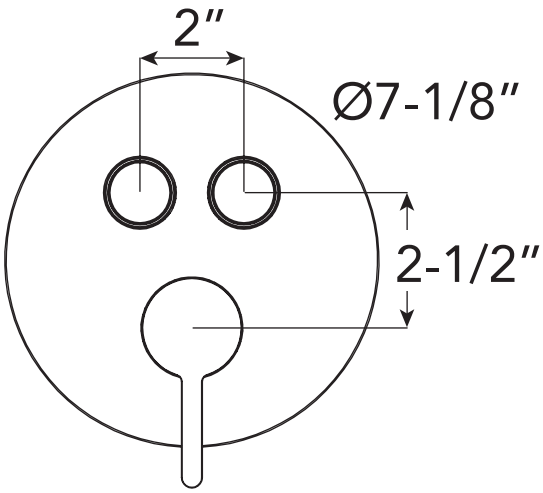

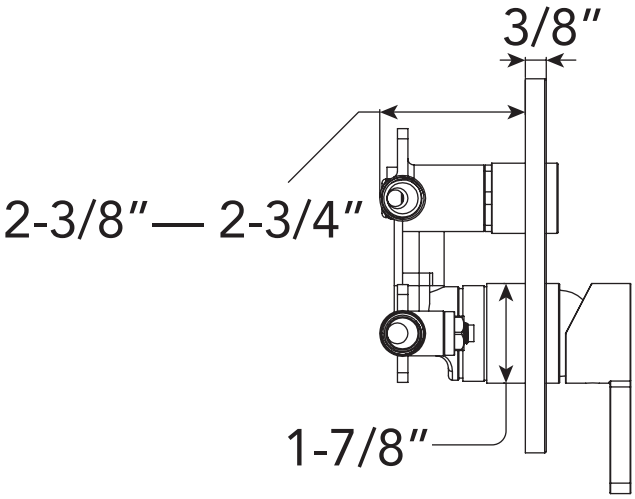

Compliance Certifications-
Meet or Exceed the Following Specifications

Meets the Americans with Disabilities Act guidelines and ANSI A1171 requirements for accessible and usable building facilities-check local codes when installed per accessibility guidelines of the act.