Ready Tile Shower Bases
FTT End & Center Drain

Features

- Single threshold for alcove installation.
- Low profile shower base for tile. Can be recessed into floor for a lower threshold.
- Select from center drain or end drain location. For end drain location must order either LH or RH drain.
- Lightweight SMC sheet molding compound material.
- Installation for new and existing construction.
- Integral tiling flange for a waterproof installation.
- Self supporting.
- Linear drains can be used in this base.
- Includes shower drain with polished stainless steel drain cover. 2" solvent drain connection.
- Weight capacity of 2204.6 pounds (1000 kg).
- 10 Year Limited Residential Warranty / 3 Year Commercial Warranty.

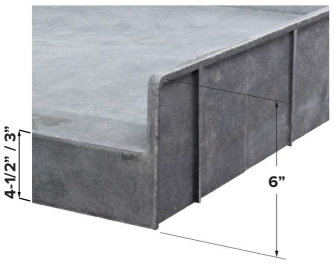

Center Drain Model *(4940C)*

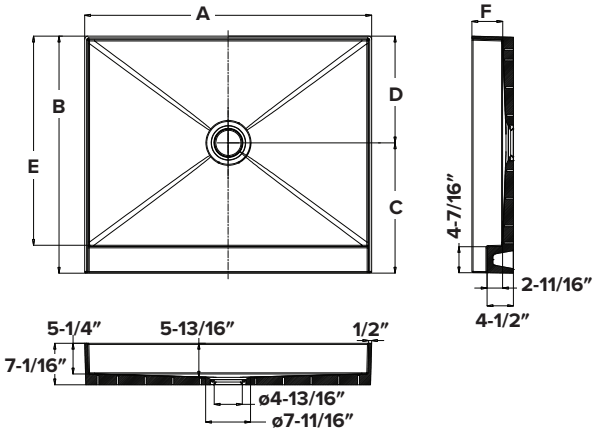

Center Drain Models *(60__C)*

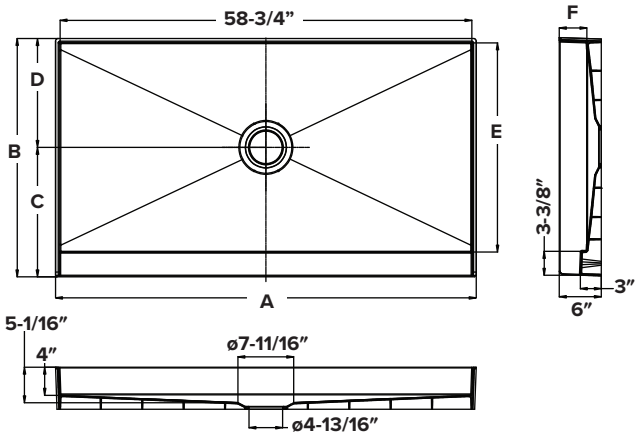

Specified Model

	Model	A	B	C	D	E	F	Ship Wt. (lbs)
❒	FTT4940C	49"	40-1/2"	22-1/4"	18-1/4"	35-5/16"	5-1/4"	61.73
❒	FTT6030C	60"	30"	16-7/16"	13-9/16"	25-13/16"	4-3/16"	50.71
❒	FTT6032C	60"	32"	17-7/16"	14-9/16"	27-13/16"	4-1/8"	52.91
❒	FTT6034C	60"	34"	18-7/16"	15-9/16"	29-13/16"	4"	55.12
❒	FTT6036C	60"	36"	19-7/16"	16-9/16"	31-13/16"	3-15/16"	57.32
❒	FTT6030R/L	60"	30"	16-1/2"	13-1/2"	25-13/16"	4-3/16"	50.71
❒	FTT6032R/L	60"	32"	17-1/2"	14-1/2"	27-13/16"	4-1/8"	52.91
❒	FTT6034R/L	60"	34"	18-1/2"	15-1/2"	29-13/16"	4"	55.12
❒	FTT6036R/L	60"	36"	19-1/2"	16-1/2"	31-13/16"	3-15/16"	57.32

End Drain Models

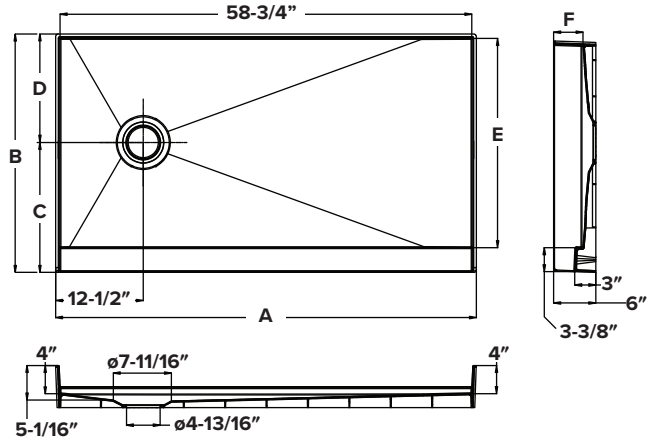

Center Drain Models

End Drain Models

Compliance Certifications- Meets or Exceeds the Following Specifications

- ASME A112.18.1 / CSA B125.125.1-11
- IAPMO
- cUPC®

SHOWER BASES