Cabinet Fillers & Filler Overlays

Fillers (see table for models)

FEATURES

- Made of birch for durability and longevity
- UV Coated Finish
- 3/4” Thick Solid Birch
- Fills gaps between the cabinet and wall or between cabinets
- Touch-Up Kit (SMTOUCHUPKIT) available to repair minor nicks and scratches (sold separately)

COLORS

- 6 colors available. White, Light Grey, Navy Blue, and Green are all Painted colors. Tan Wood and Smokey Grey are both Stained Wood colors.

WARRANTY

- 5-Year Limited Residential Warranty

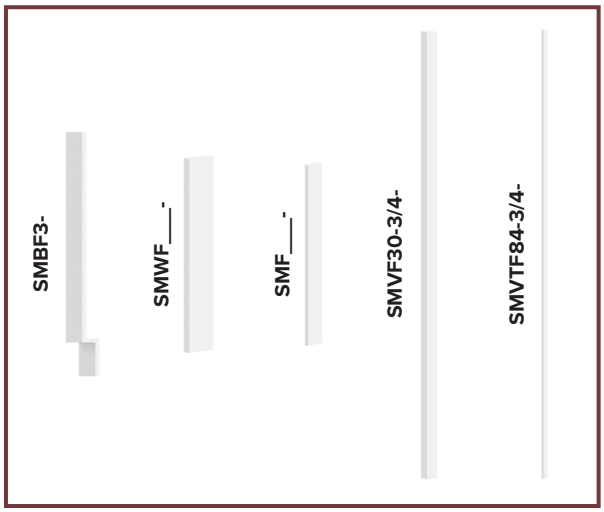

ACCESSORIES

Accessory Models:

	Model No.	Description	Overall Size W x H x D	Ship Wt. (lbs)
❒	SMBF3-	Base Filler	3" x 34½” x ¾”	1.90
❒	SMWF330-	Wall / Base Filler	3” x 30” x ¾”	1.46
❒	SMWF336-	Wall / Base Filler	3” x 36” x ¾”	1.68
❒	SMWF342-	Wall / Base Filler	3” x 42” x ¾”	2.45
❒	SMWF630-	Wall / Base Filler	6” x 30” x ¾”	3.57
❒	SMWF636-	Wall / Base Filler	6” x 36” x ¾”	4.19
❒	SMWF642-	Wall / Base Filler	6” x 42” x ¾”	4.88
❒	SMF390-	Tall Filler	3” x 90” x ¾”	5.16
❒	SMF396-	Tall Filler	3” x 96” x ¾”	5.51
❒	SMF696-	Tall Filler	6” x 96” x ¾”	11.03
❒	SMVF30-3/4-	Vanity Filler	3/4" x 30” x ¾”	0.44
❒	SMVTF84-3/4-	Vanity Tall Filler	3/4" x 84” x ¾”	0.99

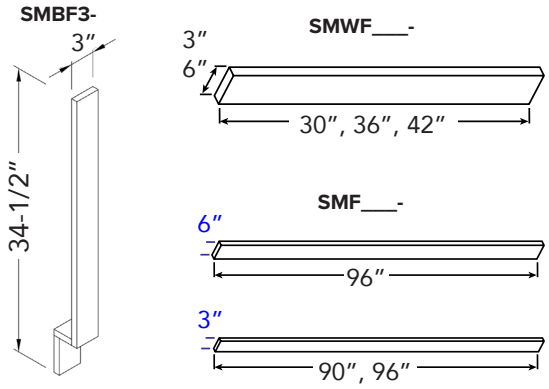

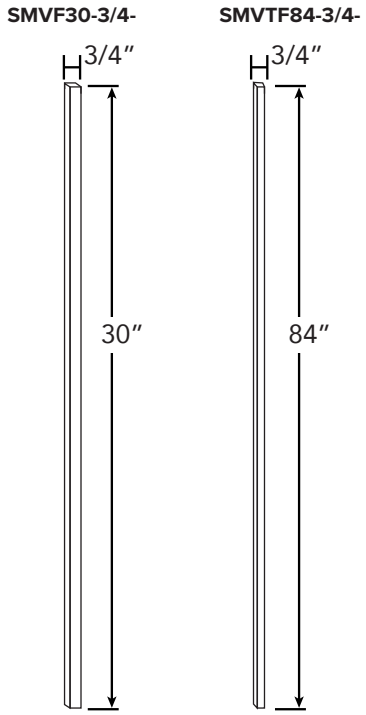

ACCESSORY COLOR OPTIONS					
❒	**TW** Tan Wood	❒	**WH** White	❒	**SG** Smokey Grey
❒	**LG** Light Grey	❒	**NB** Navy Blue	❒	**GR** Green

Accessory Colors:

TW Tan Wood | **WH** White | **SG** Smokey Grey | **LG** Light Grey | **NB** Navy Blue | **GR** Green